HSF

NOTES:
Rated Current:3.0AMP
Contact Resistance:20mΩ max
Withstand Voltage:500V AC/Minute
Insulation Resistance:1000MΩ min
Operation Temperature:−55℃ to +105℃

Material:Brass
Thickness:0.20
Finish:Gold or Tin−Plated
Q'ty/Reel:10,000PCS

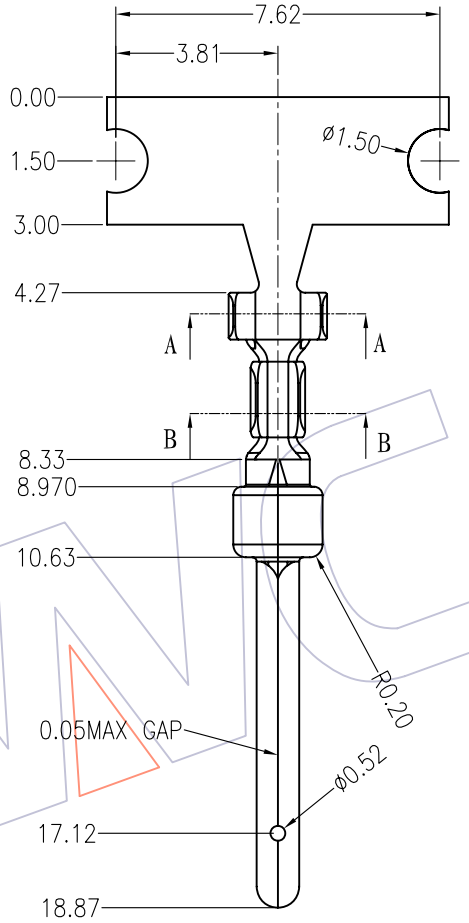

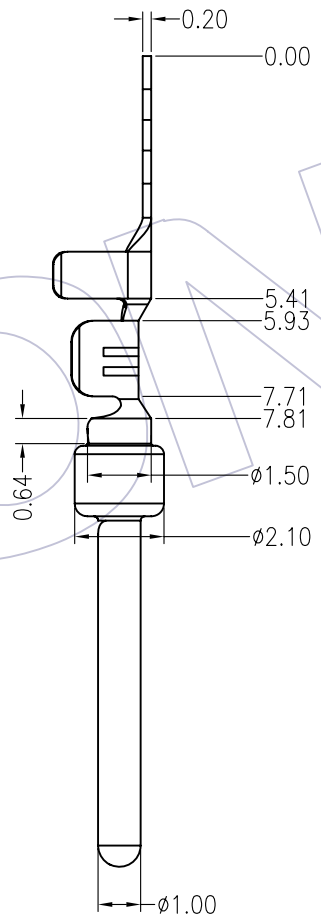

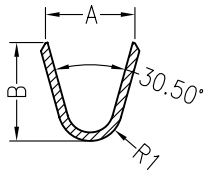

Section A−A

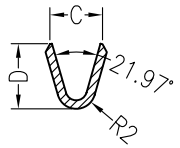

Section B−B

Ordering Information

T6221 - M C 0 B XX 01

Contact Material
B=Brass
P=Phosphor bronze

Contact Plating
G0=Gold Flash
G1=3u"Gold
G2=5u"Gold
G3=10u"Gold
G4=15u"Gold
G5=30u"Gold
S0=Gold Flash/Tin
S1=3u"Gold/Tin
S2=5u"Gold/Tin
S3=10u"Gold/Tin
S4=15u"Gold/Tin
S5=30u"Gold/Tin
SN=Tin

DIM \ AWG	#20-22	#24-26	#20-30
A	2.64	2.14	2.10
B	2.70	2.26	1.96
C	1.86	1.75	1.67
D	2.13	1.54	1.38
R1	R0.90	R0.90	R0.75
R2	R0.75	R0.75	R0.75

REV	DATE	MODIFICATION DESCRIPTION	CHANGE	APPROVE
A0	09/03/07	NEW	———	———

OPERATION	
X.X	±0.30
X.XX	±0.25
X.XXX	±0.15
Angle	± 3°
DIM	TOL

DRAW	William Chen	09.03.07
DESIGN		
CHECK		
APPROVE		

SCALE	1:1
UNIT	mm
SIZE	A4
SHEET	1/1
PROJ.	

WCON 维峰五金电子有限公司
WAFE HARDWARE ELECTRONICS CO.LTD

PART NO.	T6221-MC0BXX01
TITLE:	D-SUB CONNECTOR CRIMP TYPE MALE TERMINAL
Customer NO.	