# HSF

NOTES:
Rated Current:1.0AMP
Contact Resistance:30mΩ max
Withstand Voltage:500V AC/DC
Insulation Resistance:100MΩ min
Operation Temperature:−55℃ to +105℃

Contact Material:Brass
Contact Plating:Au or Sn Over Ni
Shell Material:Brass
Shell Plating:Ni Over Cu
Insulator Material:High Temperature Thermoplastic(UL94V−0)

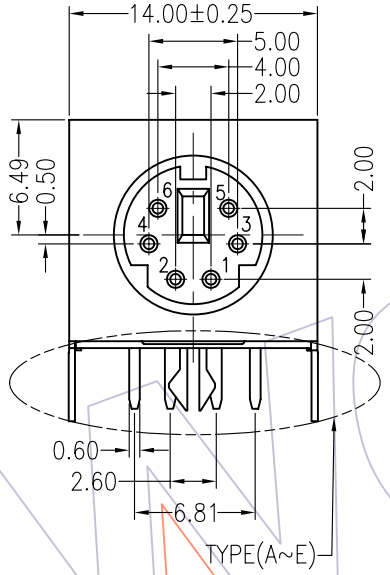


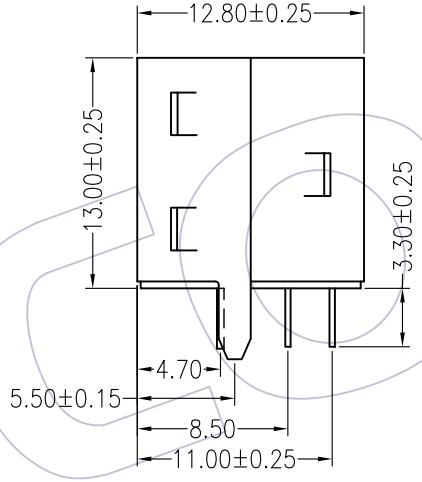


Recommended P.C.B Layout(Top Side)
(PCB BOARD TOLERANCE±0.05)

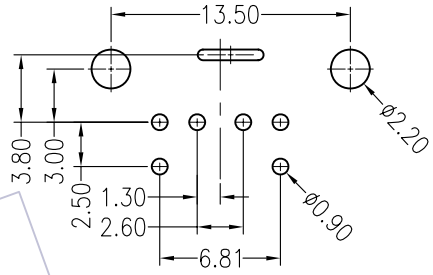


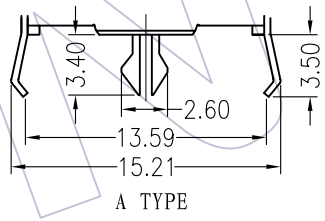

A TYPE

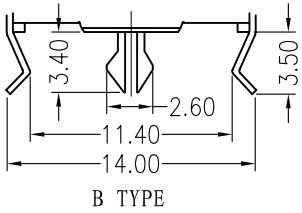

B TYPE

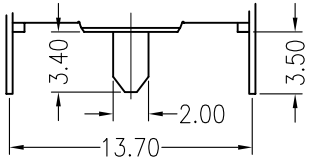

C TYPE

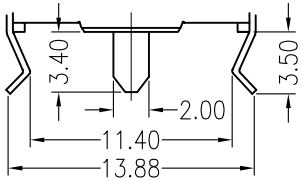

D TYPE

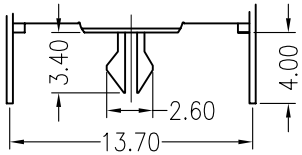

E TYPE

## *Ordering Information*

6420- XX F XX C X 01

| No.of Pins | Contact Plating | Colour |
|---|---|---|
| 03~09P | G0=Gold Flash | B=Black |
| | G1=3u"Gold | U=Blue |
| | G2=5u"Gold | N=Green |
| | G3=10u"Gold | |
| | G4=15u"Gold | |
| | G5=30u"Gold | |
| | S0=Gold Flash/Tin | |
| | S1=3u"Gold/Tin | |
| | S2=5u"Gold/Tin | |
| | S3=10u"Gold/Tin | |
| | S4=15u"Gold/Tin | |
| | S5=30u"Gold/Tin | |
| | SN=Tin | |

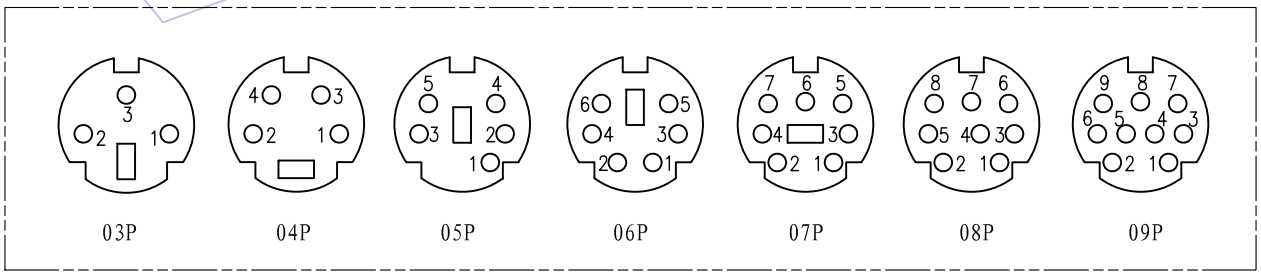


| REV | DATE | MODIFICATION DESCRIPTION | CHANGE | APPROVE |
|---|---|---|---|---|
| A0 | 09/03/02 | NEW | ——— | ——— |

| OPERATION | | DRAW | William Chen | 09.03.02 |
|---|---|---|---|---|
| X.X | ±0.40 | DESIGN | | |
| X.XX | ±0.25 | | | |
| X.XXX | ±0.15 | CHECK | | |
| Angle | ± 3° | APPROVE | | |
| DIM | TOL | | | |

| | |
|---|---|
| SCALE | 1:1 |
| UNIT | mm |
| SIZE | A4 |
| SHEET | 1/1 |
| PROJ. | |

WCON 维峰五金电子有限公司
WAFE HARDWARE ELECTRONICS CO.LTD

| | |
|---|---|
| PART NO. | 6420-XXFXXCX01 |
| TITLE: | MINI DIN FEMALE 90° DIP |
| Customer NO. | |