HSF

NOTES:
Rated Current:0.5AMP
Contact Resistance:30mΩ max
Withstand Voltage:500V AC/DC
Insulation Resistance:1000MΩ min
Operation Temperature:−55℃ to +85℃

Contact Material:Phosphor Bronze
Contact Plating:Sn Over Ni
Insulator Material:Thermoplastic UL94V−0

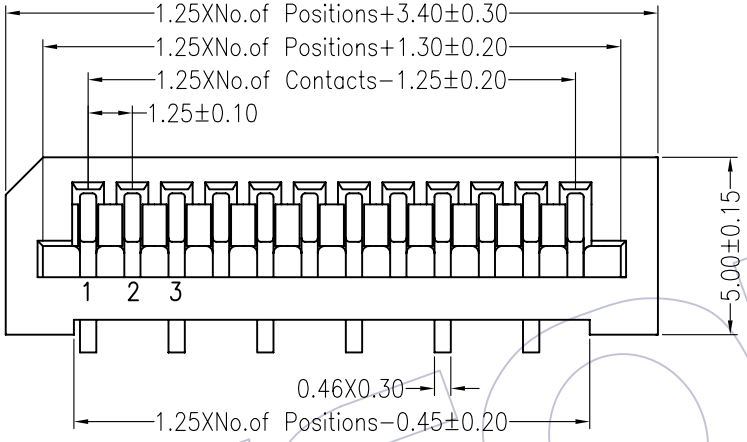

Recommended P.C.B Layout(Top Side)
(PCB BOARD TOLERANCE±0.05)

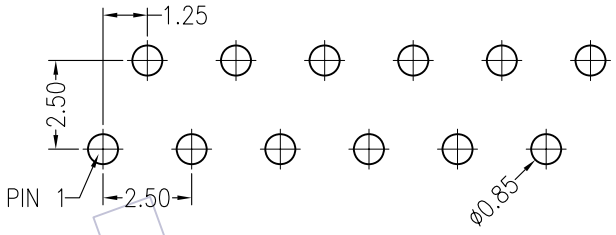

Ordering Information

5120-XX S D X N X 01

- XX: No.of Pins 02~36P
- X: Contact Type U=Up contact B=Bottom contact
- X: Color A=Brown B=Black W=White E=Beige

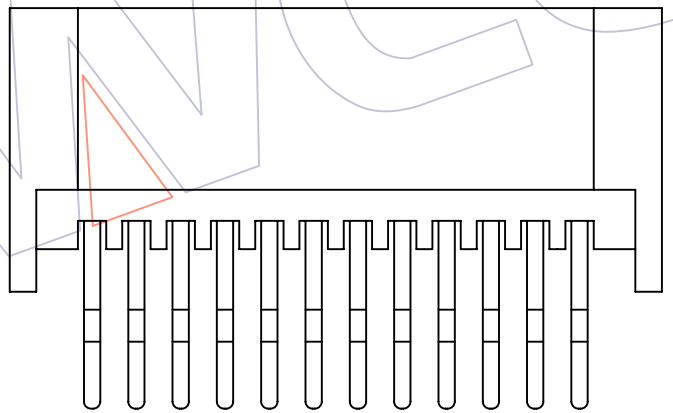

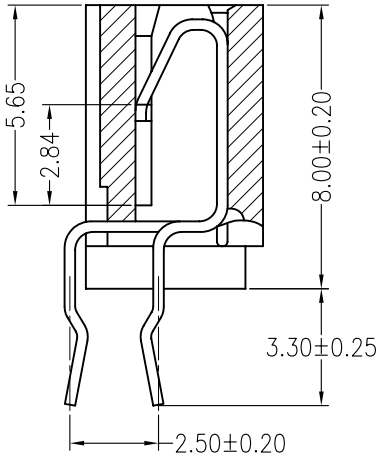

REV	DATE	MODIFICATION DESCRIPTION	CHANGE	APPROVE
A0	09/02/18	NEW	———	———

OPERATION				
X.X	±0.40	DRAW	William Chen	09.02.18
X.XX	±0.25	DESIGN		
X.XXX	±0.15	CHECK		
Angle	± 3°	APPROVE		
DIM	TOL			

SCALE	1:1
UNIT	mm
SIZE	A4
SHEET	1/1
PROJ.	

WCON 维峰五金电子有限公司 WAFE HARDWARE ELECTRONICS CO.LTD

PART NO.	5120-XXSDXNX01
TITLE:	1.25 FPC 180° DIP SINGLE CONTACT W/O LOCK
Customer NO.	

WCON