HSF

NOTES:
Current Rating:3.0AMP
Contact Resistance:30mΩ max
Withstand Voltage:1000V AC/Minute
Insulation Resistance:1000MΩ min
Operation Temperature:−55℃ to +105℃

Contact Material:Phosphor Bronze
Contact plating:Au or Sn Over Ni
Insulator Material:PBT+30%G.F UL94V−0

Recommended P.C.B Layout(Top Side)
(PCB BOARD TOLERANCE±0.05)

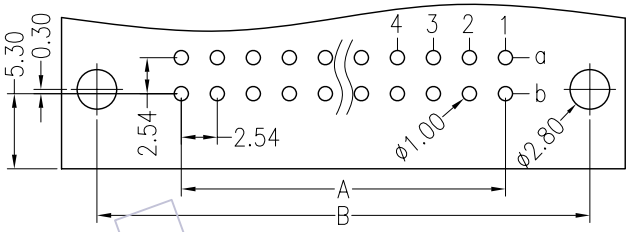

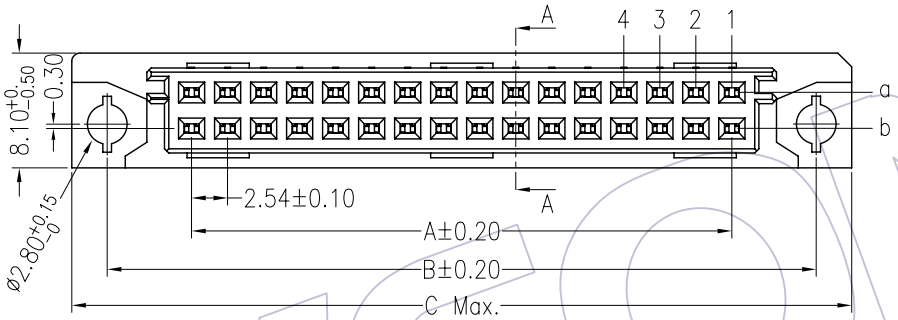

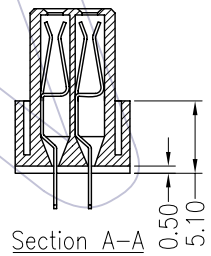

Section A−A

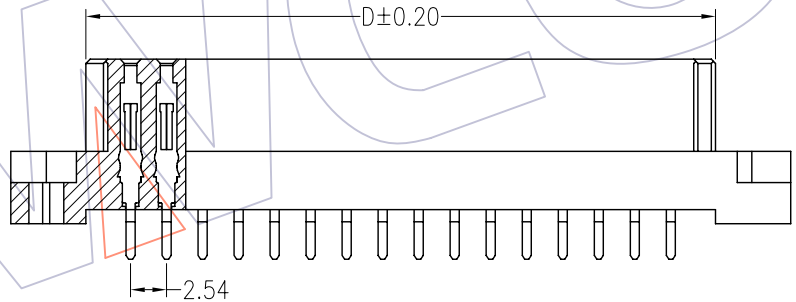

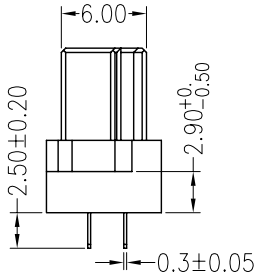

TYPE 1

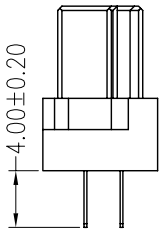

TYPE 2

Ordering Information

3410-2 XX X FS XX N A X

No.of Pins per	Rows with Contacts	Contact Plating	Packing	Type
16pin	B=a+b	G0=Gold Flash	A=Tray	1=Type 1
32pin	D=a	G1=3u"Gold	T=Tube	2=Type 2
	H=a+b 5.08Pitch	G2=5u"Gold		
		G3=10u"Gold		
		G4=15u"Gold		
		G5=30u"Gold		
		S0=Gold Flash/Tin		
		S1=3u"Gold/Tin		
		S2=5u"Gold/Tin		
		S3=10u"Gold/Tin		
		S4=15u"Gold/Tin		
		S5=30u"Gold/Tin		
		SN=Tin		

No.of Pins	A	B	C	D	PART NO.
2X16P	38.10	50.00	55.00	44.40	3410−216XFSXXNAX
2X32P	78.74	90.00	95.00	85.00	3410−232XFSXXNAX

Pitch	Rows/Positions With Contacts		PART NO.
2.54	a b	4 3 2 1 a b	3410−2XXBFSXXNAX
	a −	4 3 2 1 a b	3410−2XXDFSXXNAX
5.08	a b	4 3 2 1 a b	3410−2XXHFSXXNAX

REV	DATE	MODIFICATION DESCRIPTION	CHANGE	APPROVE
A0	09/03/04	NEW	———	———

OPERATION		DRAW	William Chen	09.03.04
X.X	±0.40	DESIGN		
X.XX	±0.25			
X.XXX	±0.15	CHECK		
Angle	± 3°			
DIM	TOL	APPROVE		

SCALE	1:1
UNIT	mm
SIZE	A4
SHEET	1/1
PROJ.	

WCON 维峰五金电子有限公司
WAFE HARDWARE ELECTRONICS CO.LTD

PART NO.	SEE TABLE
TITLE:	DIN41612 FEMALE DUAL ROW 180° DIP (B-TYPE)
Customer NO.	