HSF

NOTES:
Current Rating:1.0AMP
Contact Resistance:30mΩ max
Withstand Voltage:500V AC/DC
Insulation Resistance:1000MΩ min
Operation Temperature:−40℃ to +105℃

Contact Material:Brass
Contact plating:Au or Sn Over Ni
Insulator Material:PA66+30%G.F

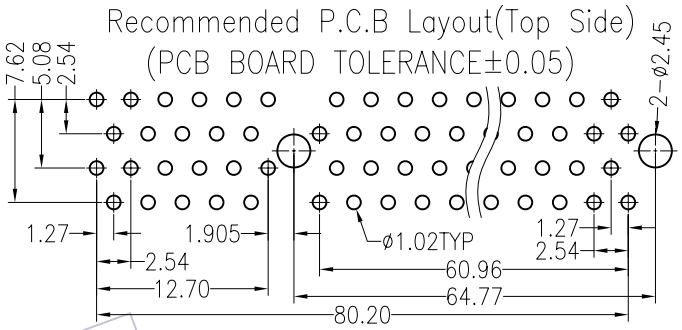

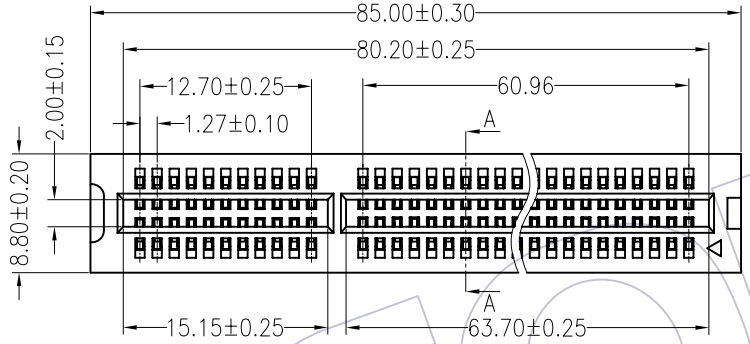

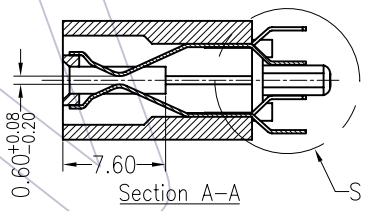

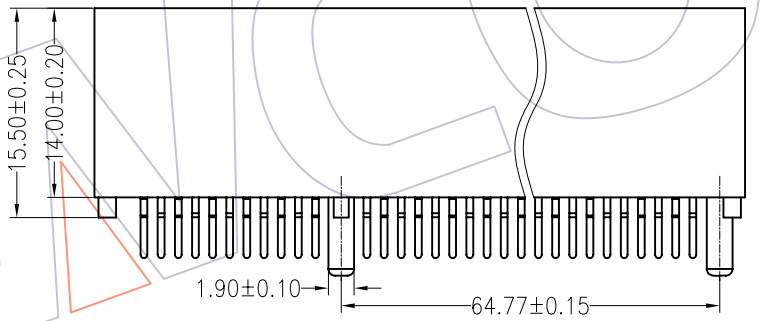

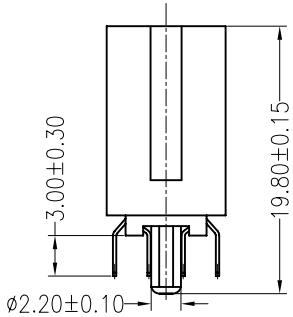

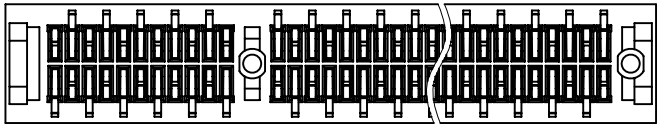

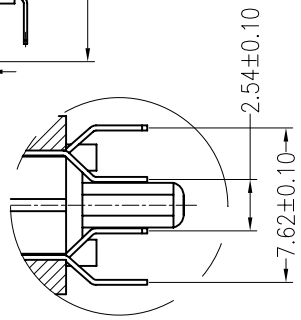

DETAIL S(1.5:1)

Ordering Information

7510-120 S X B B 01

Color:
B=Black
W=White
U=Blue
Y=Yellow
R=Red
G=Grey

Insulator:
B=PA66

REV	DATE	MODIFICATION DESCRIPTION	CHANGE	APPROVE
A0	08/06/13	NEW	———	———

OPERATION				
X.X	±0.40	DRAW	WEIXD	08/06/13
X.XX	±0.25	DESIGN		
X.XXX	±0.15	CHECK		
Angle	± 3°	APPROVE		
DIM	TOL			

SCALE	1:1
UNIT	mm
SIZE	A4
SHEET	1/1
PROJ.	

WCON 维峰五金电子有限公司
WAFE HARDWARE ELECTRONICS CO.LTD

PART NO.	7510-120SXBB01
TITLE:	PCI Slot 120Pin DIP Type
Customer NO.	