HSF

NOTES:
Current Rating:5AMP
Contact Resistance:30mΩ max
Withstand Voltage:500V AC/DC
Insulation Resistance:100MΩ min
Operation Temperature:−40℃ to +105℃

Contact Material:Phosphor Bronze
Contact Plating:Au or Sn Over Ni
Insulator Material:PA6T+30%G.F(UL94V−0)

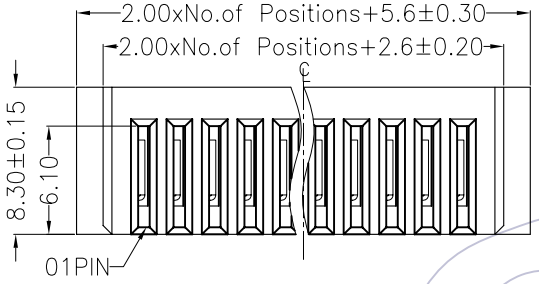

Recommended P.C.B Layout(Top Side)
(PCB BOARD TOLERANCE±0.05)

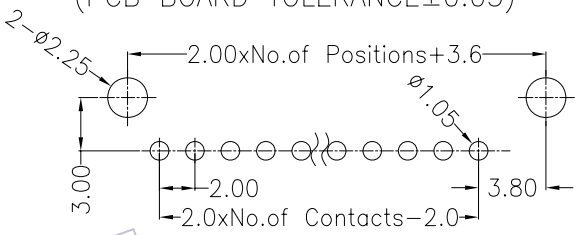

Ordering Information

4111 - F XX N 01 D XX 0 1

No.of Pins per Row: 4~12P

Contact Plating
G1=3μ"Gold
G2=5μ"Gold
G3=10μ"Gold
G4=15μ"Gold
G5=30μ"Gold
S1=3μ"Gold/Tin
S2=5μ"Gold/Tin
S3=10μ"Gold/Tin
S4=15μ"Gold/Tin
S5=30μ"Gold/Tin

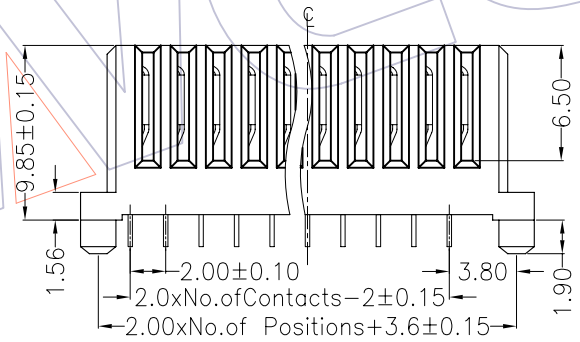

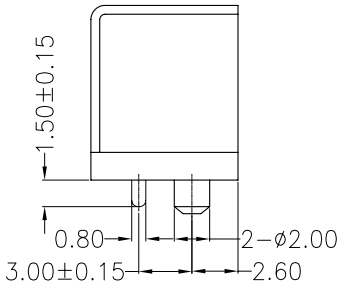

WCON

REV	DATE	MODIFICATION DESCRIPTION	CHANGE	APPROVE
A0	08/04/08	NEW	———	———

OPERATION				
X.X	±0.40	DRAW	WEIXD	08/04/08
X.XX	±0.25	DESIGN		
X.XXX	±0.15	CHECK		
Angle	± 3°	APPROVE		
DIM	TOL			

SCALE	2.5:1
UNIT	mm
SIZE	A4
SHEET	1/1
PROJ.	

WCON 维峰五金电子有限公司
WAFE HARDWARE ELECTRONICS CO. LTD

PART NO.	4111−FXXN01DXX01
TITLE:	2.0 BATTERY FEMALE H=9.85 W=8.3
Customer NO.	