WCON®
HTTP:WWW.WAFE-CHINA.COM

TERMINAL

2.0mm Battery Female Connector

SPECIFICATIONS

FILE NO.E248993

Current Rating: 5.0AMP
Contact Resistance: 30mΩ Max.
Insulation Resistance: 100MΩ Min.
Withstanding Voltage : 500V AC/Minute
Operation Temperature: −40°C to+85°C
Contact Material: Phosphor Bronze
Contact plating: Au or Tin Over Ni
Insulator Material: Polyester (UL94V−0)
Standard: PA6T+30%GF

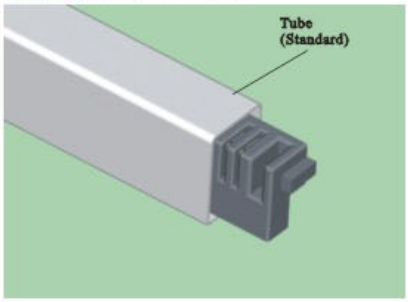

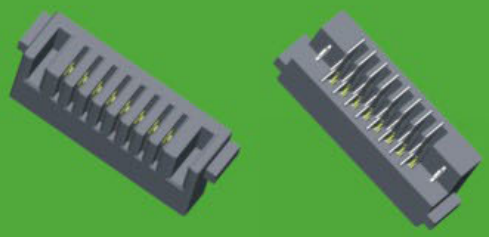

4112FXXN00DXX01

4114F XX N 00 R XX 01

NO.OF PIN
5~12PIN

CONTACT PLATING

G0:1u" Gold	S0:1u" Gold/Tin
G1:3u" Gold	S1:3u" Gold/Tin
G2:5u" Gold	S2:5u" Gold/Tin
G3:10u"Gold	S3:10u"Gold/Tin
G4:15u"Gold	S4:15u"Gold/Tin
G5:30u"Gold	S5:30u"Gold/Tin
G6:20u"Gold	S6:20u"Gold/Tin
	SN:Tin

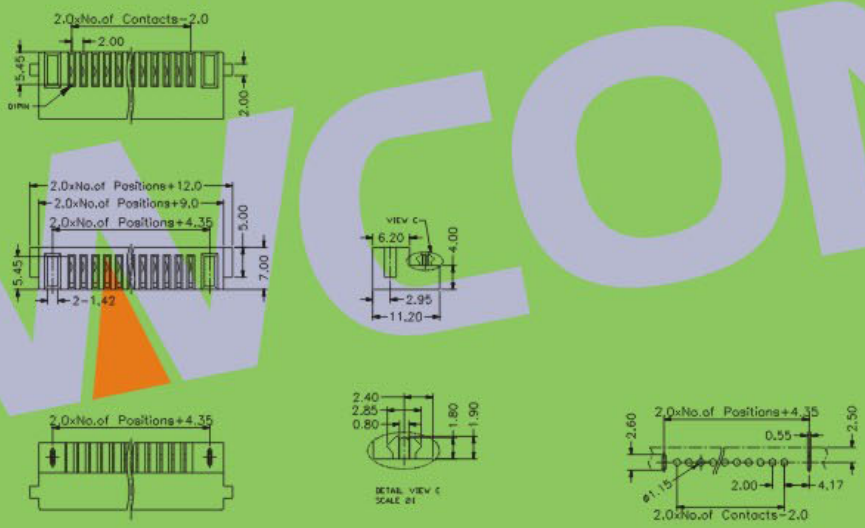

Recommended P.C.B Layout (Top Side)

※ ※INNOVATION AND DEVELOPMENT ※ ※CONTINUAL IMPROVEMENT ※ ※QUALITY FOREMOST ※ ※CUSTOMER SATISFACTION ※ ※

Http:www.wafe-china.com E-mail:sales@wafe-china.com
WAFE DONGGUAN FAX:+86 769 85358915 TEL:+86 769 85358920
WAFE KUNSHAN FAX:+86 512 57468468 TEL:+86 512 57468418