HSF

NOTES:
Current Rating:1AMP
Contact Resistance:20mΩ max
Withstand Voltage:500V AC/DC
Insulation Resistance:1000MΩ min
Operation Temperature:−40℃ to +105℃

Contact Material:Brass
Contact plating:Au or Sn Over Ni
Insulator Material:PA6T+30%GF(UL94V−0)

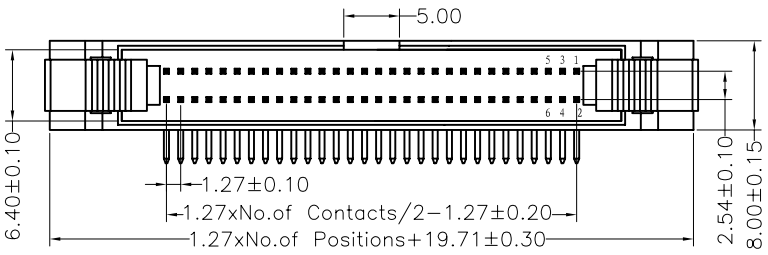

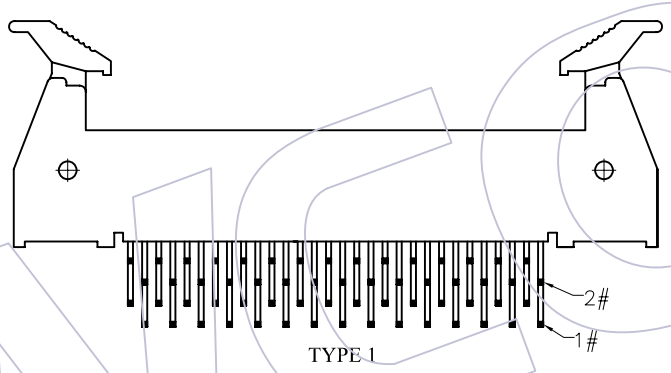

TYPE 1

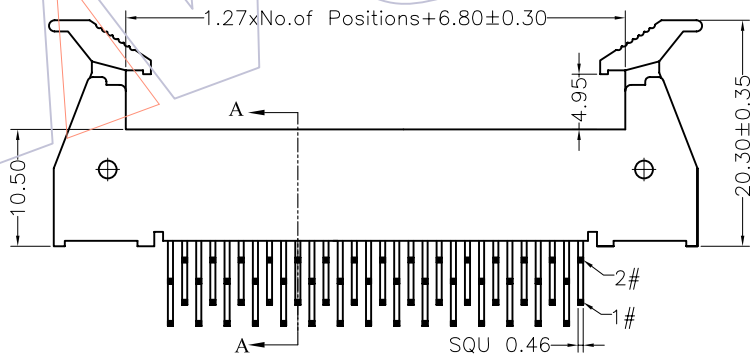

TYPE 2

Recommended P.C.B Layout(Top Side)
(PCB BOARD TOLERANCE±0.05)

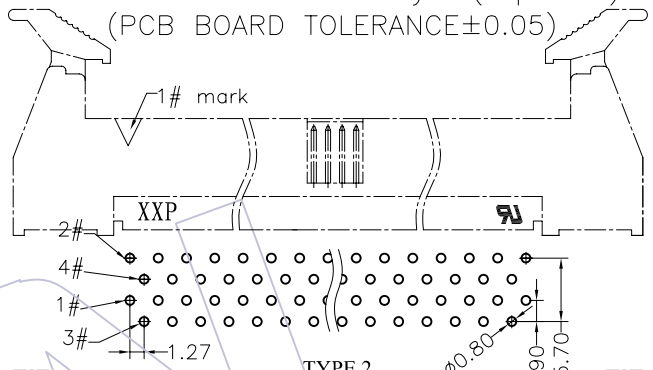

TYPE 2

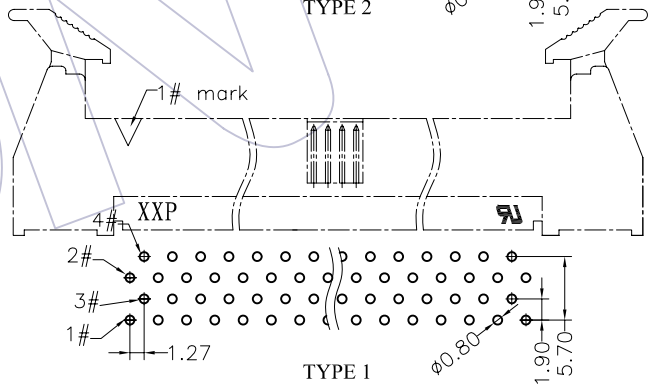

TYPE 1

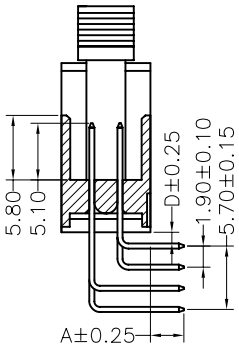

Section "A-A"

Ordering Information

3241- XX R XX B S X X

No.of Pins	Contact Plating	Color Insulator	Packing	Series No.
10 34	G0=Gold Flash	B=Black	A=Tray	1=Type 1
12 40	G1=3u"Gold	U=Blue	T=Tube	2=Type 2
14 44	G2=5u"Gold	W=White		
16 50	G3=10u"Gold			
20 60	G4=15u"Gold			
24 64	G5=30u"Gold			
26 80	S0=Gold Flash/Tin			
30 100	S1=3u"Gold/Tin			
32	S2=5u"Gold/Tin			
	S3=10u"Gold/Tin			
	S4=15u"Gold/Tin			
	S5=30u"Gold/Tin			
	SN=Tin			

Dimension antitheses list		
ITEM	A	D
Standard	3.00	1.00
Alternate		

REV	DATE	MODIFICATION DESCRIPTION	CHANGE	APPROVE
A2	08/11/24	在PCB板位上作组装视图		
A1	08/11/17	变更PCB板孔距及脚距和视图		
A0	08/11/13	NEW	———	———

OPERATION	
X.X	±0.40
X.XX	±0.25
X.XXX	±0.15
Angle	± 3°
DIM	TOL

DRAW	WEIXD	08/11/17
DESIGN		
CHECK		
APPROVE		

SCALE	1:1
UNIT	mm
SIZE	A4
SHEET	1/1
PROJ.	

WCON 维峰五金电子有限公司
WAFE HARDWARE ELECTRONICS CO.LTD

PART NO.	3241-XXRXXBSXX
TITLE:	1.27*2.54 EJECTOR HEADER 90° FOUR ROW FOOT
Customer NO.	