# HSF

NOTES:
Current Rating:1.5AMP
Contact Resistance:20mΩ max
Withstand Voltage:500V AC/DC
Insulation Resistance:1000MΩ min
Operation Temperature:−40℃ to +105℃

Contact Material:Brass
Contact plating:Au or Sn Over Ni
Insulator Material:LCP+30%GF(UL94V−0)

Recommended P.C.B Layout(Top Side)
(PCB BOARD TOLERANCE±0.05)

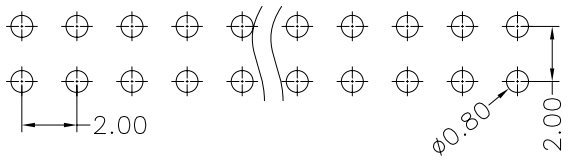


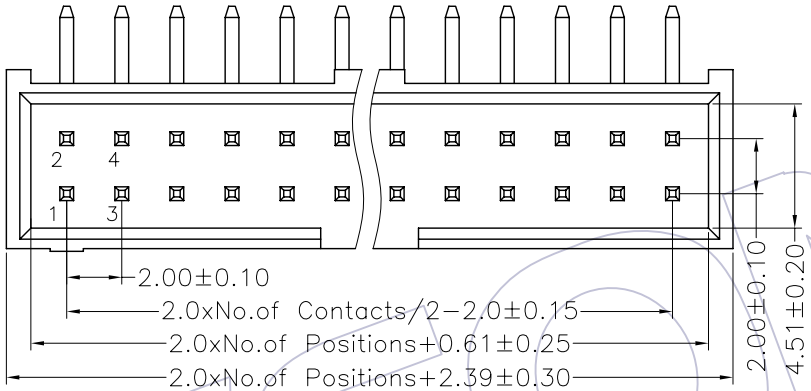


## *Ordering Information*

3124-XX R XX B K00 X 2

| No.of Pins | Contact Plating | Color Insulator | Packing |
|---|---|---|---|
| 10 30 | G0=Gold Flash | B=Black | A=Tray |
| 14 34 | G1=3u"Gold | U=Blue | T=Tube |
| 16 40 | G2=5u"Gold | W=White | |
| 20 44 | G3=10u"Gold | | |
| 24 50 | G4=15u"Gold | | |
| 26 60 | G5=30u"Gold | | |
| | S0=Gold Flash/Tin | | |
| | S1=3u"Gold/Tin | | |
| | S2=5u"Gold/Tin | | |
| | S3=10u"Gold/Tin | | |
| | S4=15u"Gold/Tin | | |
| | S5=30u"Gold/Tin | | |
| | SN=Tin | | |

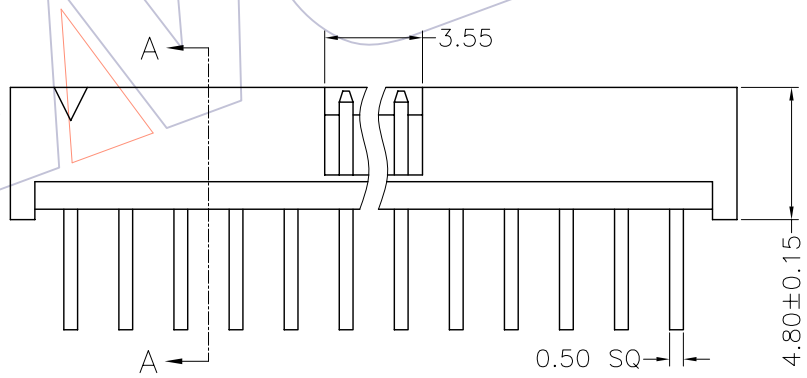


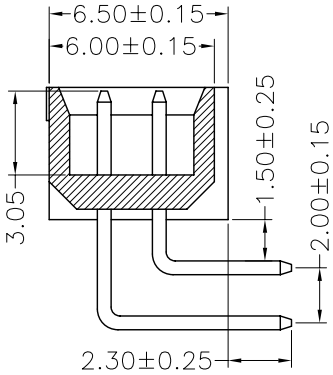


SECTION A−A

| REV | DATE | MODIFICATION DESCRIPTION | CHANGE | APPROVE |
|---|---|---|---|---|
| A0 | 08/05/06 | NEW | | ——— |

| OPERATION | | | | |
|---|---|---|---|---|
| X.X | ±0.40 | DRAW | WEIXD | 08/05/06 |
| X.XX | ±0.25 | DESIGN | | |
| X.XXX | ±0.15 | CHECK | | |
| Angle | ± 3° | APPROVE | | |
| DIM | TOL | | | |

| | |
|---|---|
| SCALE | 4:1 |
| UNIT | mm |
| SIZE | A4 |
| SHEET | 1/1 |
| PROJ. | |

WCON 维峰五金电子有限公司
WAFE HARDWARE ELECTRONICS CO.LTD

| | |
|---|---|
| PART NO. | 3124-XXRXXBK00X2 |
| TITLE: | 2.00 BOX HEADER 90° H=4.8 SAMTEC(SHORT TYPE) |
| Customer NO. | |