HSF

NOTES:
Current Rating: 2.0AMP
Withstand Voltage: 500V AC/DC
Contact Resistance: 20mΩ Max
Insulation Resistance: 1000MΩMin
Operation Temperature: -40℃ to +105℃

Contact Material: Phosphor Bronze
Contact plating: Au or Sn over Ni
Insulator Material: PA6T+30%G.F UL94V-0

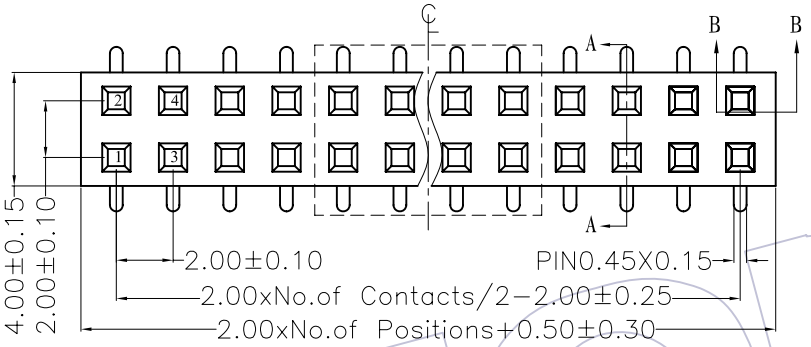

Recommended P.C.B Layout(TOP Side)
(PCB BOARD TOLERANCE±0.05)

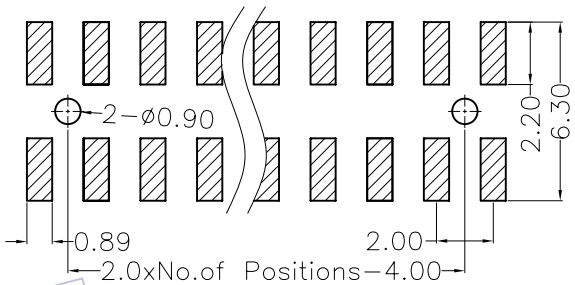

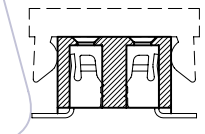

TYPE 1 W/O POST

Ordering Information

2228 - 2 XX M XX C U N T X

- No.of Pins per ROW:02~40PIN
- Contact Plating:
  G0=Gold Flash
  G1=3μ"Gold
  G2=5μ"Gold
  G3=10μ"Gold
  G4=15μ"Gold
  G5=30μ"Gold
  S0=Gold Flash/Tin
  S1=3μ"Gold/Tin
  S2=5μ"Gold/Tin
  S3=10μ"Gold/Tin
  S4=15μ"Gold/Tin
  S5=30μ"Gold/Tin
  SN=Tin
- Packing:
  T=Tube
  R=Tape&Reel+CAP
  P=Tube+CAP
- Series No.
  1=TYPE 1
  2=TYPE 2

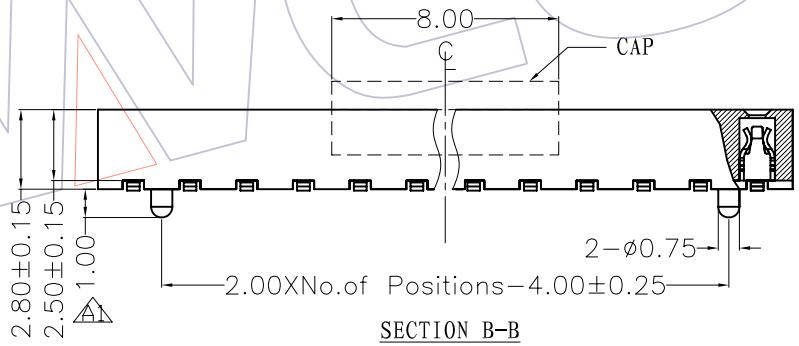

SECTION B-B

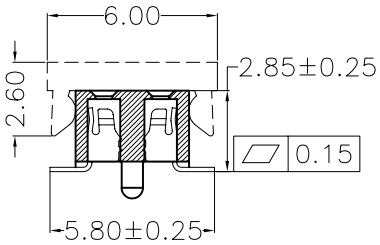

TYPE 2 WITH POST

SECTION A-A

TYPE	PART NO.
TYPE 1	2228-2XXMXXCUNT1
TYPE 2	2228-2XXMXXCUNT2

REV	DATE	MODIFICATION DESCRIPTION	CHANGE	APPROVE
A1	08/04/22	修正柱子高度由0.80更改为1.00	黄 薇	
A0	08/02/28	NEW	———	———

OPERATION	
X.X	±0.40
X.XX	±0.25
X.XXX	±0.15
Angle	± 3°
DIM	TOL

DRAW	Wille	08/04/22
DESIGN		
CHECK		
APPROVE		

SCALE	4:1
UNIT	mm
SIZE	A4
SHEET	
PROJ.	

WCON 维峰五金电子有限公司
WAFE HARDWARE ELECTRONICS CO.LTD

PART NO.	SEE TABLE
TITLE:	FH2.00mm Dual SMT H=2.8
Customer NO.	

WCON