WCON®
HTTP:WWW.WAFE-CHINA.COM

2.00mm HDD Socket, SMT Type

SPECIFICATIONS

FILE NO.E248993

Current Rating: 2.0AMP
Contact Resistance: 30mΩ Max.
Insulation Resistance: 1000MΩ Min.
Withstanding Voltage : 500V AC/Minute
Operation Temperature: −55°C to+105°C
Contact : Phosphor Bronze; Ground: Brass
Contact plating: Au or Sn Over Ni
Insulator Material: Polyester (UL94V−0)
Standard: LCP+30%GF

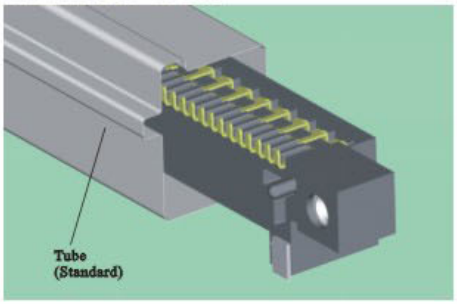

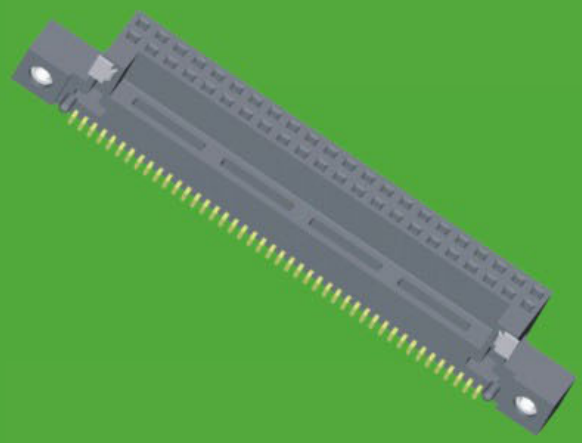

22A-XXX44MXXXNX1

22A-XXX 44 M XX X N X 1

XXX — THE DISTANCE OF CONNETOR CENTER TO THE P.C.B
049:H=4.90mm
055:H=5.50mm
063:h=6.30mm

XX — CONTACT PLATING

G0:1u" Gold	S0:1u" Gold/Tin
G1:3u" Gold	S1:3u" Gold/Tin
G2:5u" Gold	S2:5u" Gold/Tin
G3:10u"Gold	S3:10u"Gold/Tin
G4:15u"Gold	S4:15u"Gold/Tin
G5:30u"Gold	S5:30u"Gold/Tin
G6:20u"Gold	S6:20u"Gold/Tin
	SN:Tin

X — INSULATOR MATERIAL
C:Nylon−6T
D:LCP
G:Nylon−9T

X — PACKING
A:Tray T:Tube
R:Tape & Reel

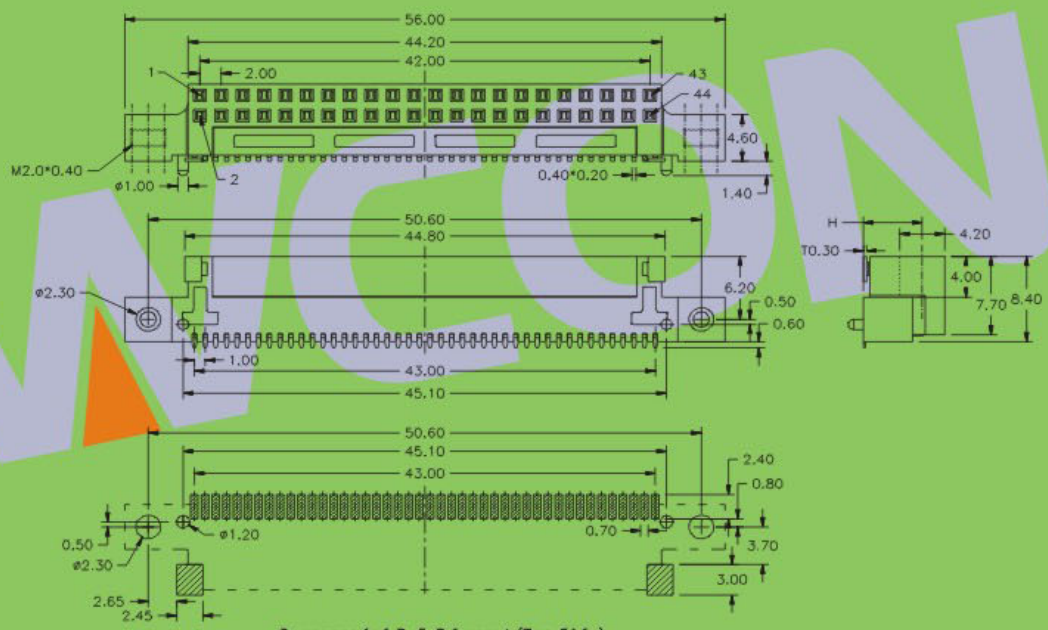

Recommended P.C.B Layout (Top Side)

※ ※INNOVATION AND DEVELOPMENT ※ ※CONTINUAL IMPROVEMENT ※ ※QUALITY FOREMOST ※ ※CUSTOMER SATISFACTION ※ ※

Http:www.wafe-china.com E-mail:sales@wafe-china.com
WAFE DONGGUAN FAX:+86 769 85358915 TEL:+86 769 85358920
WAFE KUNSHAN FAX:+86 512 57468468 TEL:+86 512 57468418