HSF

NOTES:
Current Rating: 1.0AMP
Withstand Voltage: 500V AC/DC
Contact Resistance: 20mΩ Max
Insulation Resistance: 1000MΩMin
Operation Temperature: -40℃ to +105℃

Contact Material: Phosphor Bronze
Contact plating: Au or Sn over Ni
Insulator Material: PA6T+30%G.F UL94V-0

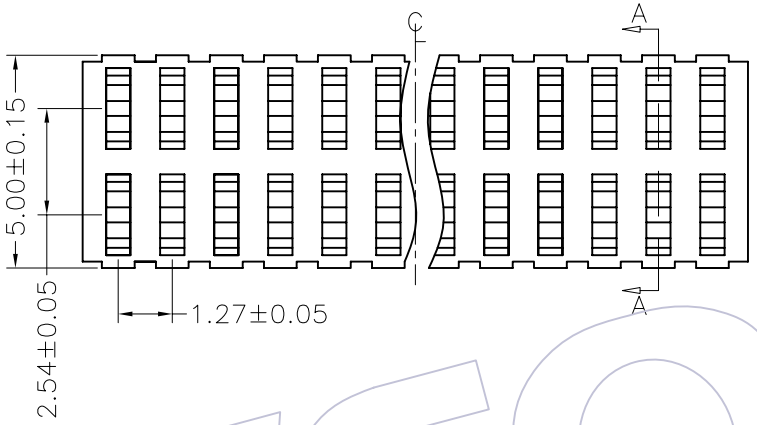

Recommended P.C.B Layout(Top Side)
(PCB BOARD TOLERANCE±0.05)

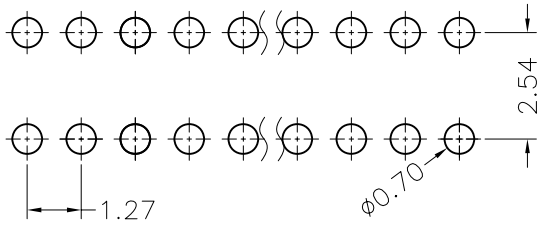

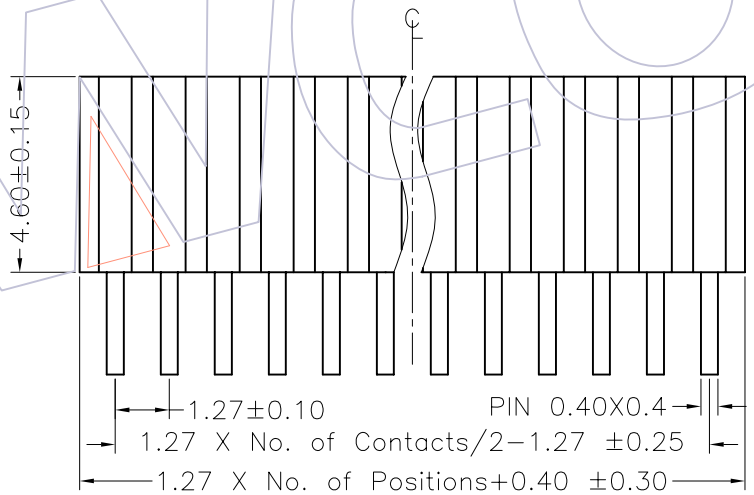

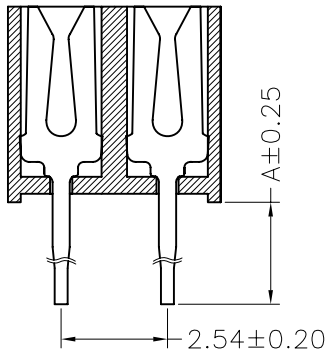

SECTION A-A

Ordering Information

2446 - 2 XX S XX C Y N T X

- XX: No.of Pins per ROW:02~50PIN
- XX: Contact Plating:
  - G0=Gold Flash
  - G1=3μ"Gold
  - G2=5μ"Gold
  - G3=10μ"Gold
  - G4=15μ"Gold
  - G5=30μ"Gold
  - S0=Gold Flash/Tin
  - S1=3μ"Gold/Tin
  - S2=5μ"Gold/Tin
  - S3=10μ"Gold/Tin
  - S4=15μ"Gold/Tin
  - S5=30μ"Gold/Tin
  - SN=Tin
- T: Packing: T=Tube
- X: Series No.
  - 1=DIP:1.6
  - 2=DIP:2.4
  - 3=DIP:3.0

TITLE	PART NO.
A=1.6	2446-2XXSXXCYNT1
A=2.4	2446-2XXSXXCYNT2
A=3.0	2446-2XXSXXCYNT3

REV	DATE	MODIFICATION DESCRIPTION	CHANGE	APPROVE
A0	08/02/14	NEW	———	———

OPERATION			
X.X	±0.40	DRAW	
X.XX	±0.25	DESIGN	
X.XXX	±0.15	CHECK	
Angle	± 3°	APPROVE	
DIM	TOL		

SCALE	6:1
UNIT	mm
SIZE	A4
SHEET	1/1
PROJ.	

WCON 维峰五金电子有限公司
WAFE HARDWARE ELECTRONICS CO.LTD

PART NO.	SEE TABLE
TITLE:	FH1.27x2.54mm DUAL 180° H=4.60
Customer NO.	

WCON