HSF

NOTES:
Current Rating:1.0AMP
Contact Resistance:20mΩ max
Withstand Voltage:500V AC/DC
Insulation Resistance:1000MΩ min
Operation Temperature:−40℃ to +105℃

Contact Material:Phosphor Bronze
Contact plating:Au or Sn Over Ni
Insulator Material:PA6T+30%G.F UL94V−0

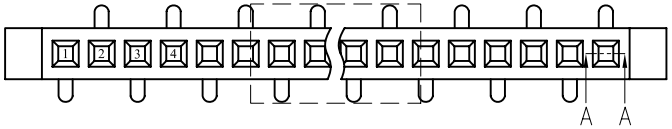

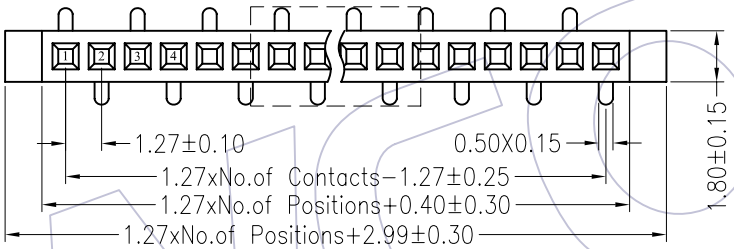

Recommended P.C.B Layout(Top Side)
(PCB BOARD TOLERANCE±0.05)

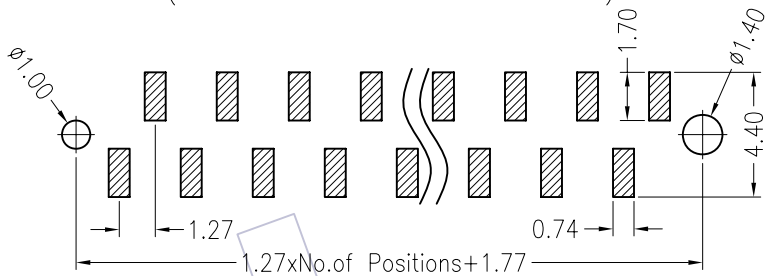

TYPE 1

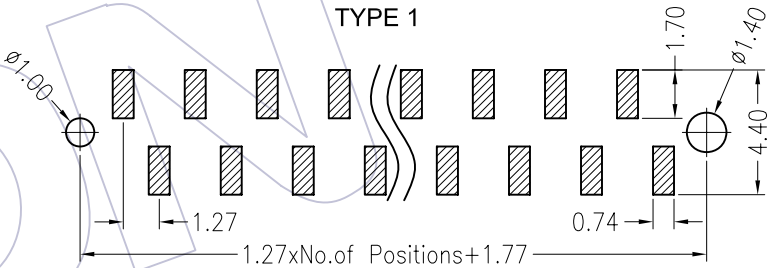

TYPE 2

Ordering Information

2344-1 XX M XX CUN X X

- No.of Pins per Row: 02~50Pin
- Contact Plating: G0=Gold Flash, G1=3u"Gold, G2=5u"Gold, G3=10u"Gold, G4=15u"Gold, G5=30u"Gold, S0=Gold Flash/Tin, S1=3u"Gold/Tin, S2=5u"Gold/Tin, S3=10u"Gold/Tin, S4=15u"Gold/Tin, S5=30u"Gold/Tin, SN=Tin
- Packing: T=Tube, P=Tube+CAP, R=Tape&Reel+CAP
- Series No.: 3=TYPE 1, 4=TYPE 2

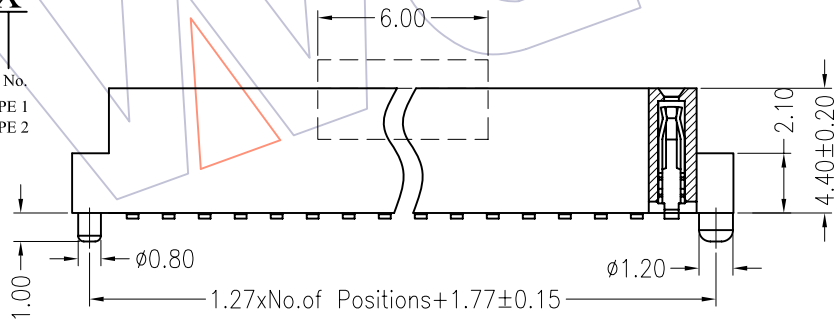

Section A−A

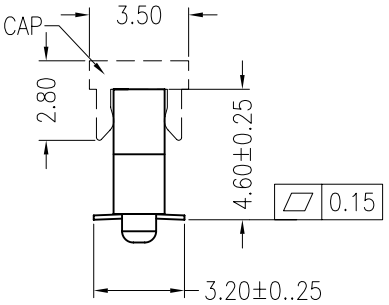

TITLE	PART NO.
TYPE 1	2344-1XXMXXXUNX3
TYPE 2	2344-1XXMXXXUNX4

REV	DATE	MODIFICATION DESCRIPTION	CHANGE	APPROVE
A0	08/06/23	NEW	———	———

OPERATION				
X.X	±0.40	DRAW	William	08/06/23
X.XX	±0.25	DESIGN		
X.XXX	±0.15	CHECK		
Angle	± 3°	APPROVE		
DIM	TOL			

SCALE	1:1
UNIT	mm
SIZE	A4
SHEET	1/1
PROJ.	

WCON 维峰五金电子有限公司
WAFE HARDWARE ELECTRONICS CO.LTD

PART NO.	SEE TABLE
TITLE:	1.27mm SINGLE FEMALE HEADERSMT H=4.40 WITH POST
Customer NO.	