HSF

NOTES:
Current Rating: 1.0AMP
Withstand Voltage: 500V AC/DC
Contact Resistance: 20mΩ Max
Insulation Resistance: 1000MΩMin
Operation Temperature: -40℃ to +105℃

Contact Material: Phosphor Bronze
Contact plating: Au or Sn over Ni
Insulator Material: PA6T+30%G.F UL94V-0

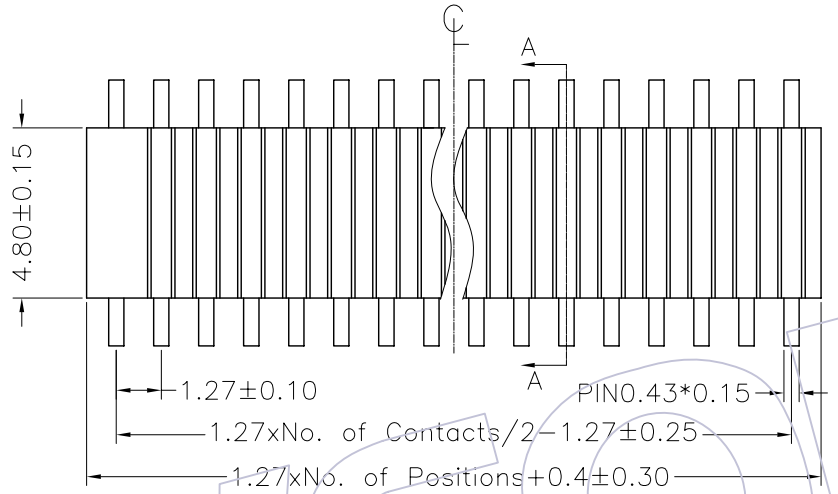

Recommended P.C.B Layout(Top Side)
(PCB BOARD TOLERANCE±0.05)

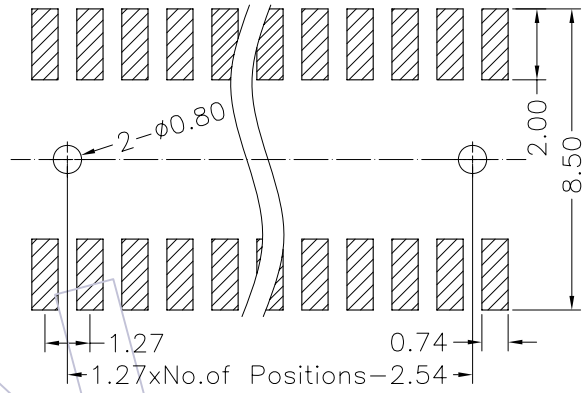

Ordering Information

2335 - 2 XX M XX CUN T 2

- No.of Pins per ROW:02~50PIN
- Contact Plating:
  G0=Gold Flash
  G1=3μ"Gold
  G2=5μ"Gold
  G3=10μ"Gold
  G4=15μ"Gold
  G5=30μ"Gold
  S0=Gold Flash/Tin
  S1=3μ"Gold/Tin
  S2=5μ"Gold/Tin
  S3=10μ"Gold/Tin
  S4=15μ"Gold/Tin
  S5=30μ"Gold/Tin
  SN=Tin
- Packing:
  T=Tube
  R=Tape&Reel+CAP
  P=Tube+CAP

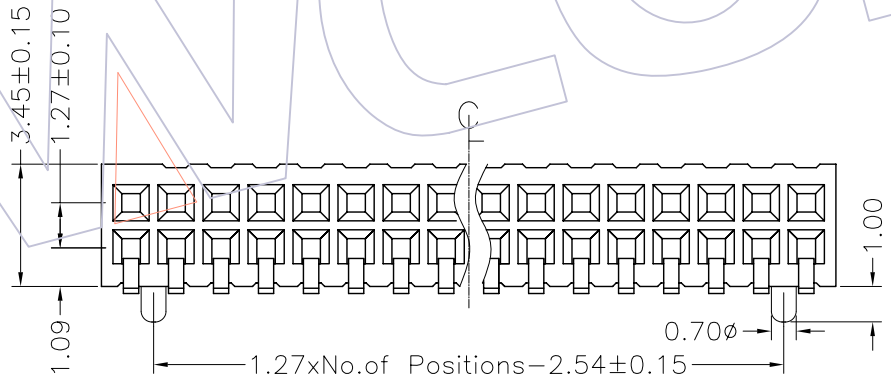

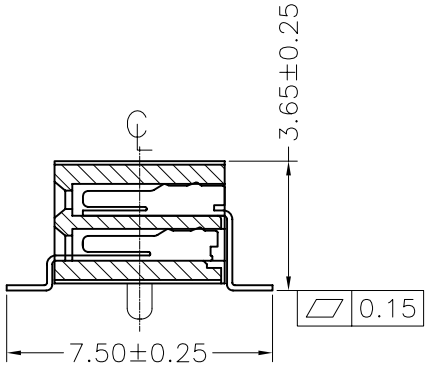

SECTION A-A

REV	DATE	MODIFICATION DESCRIPTION	CHANGE	APPROVE
A0	08/02/16	NEW		

OPERATION		
X.X	±0.40	DRAW
X.XX	±0.25	DESIGN
X.XXX	±0.15	CHECK
Angle	± 3°	APPROVE
DIM	TOL	

SCALE	5:1
UNIT	mm
SIZE	A4
SHEET	1/1
PROJ.	

WCON 维峰五金电子有限公司
WAFE HARDWARE ELECTRONICS CO.LTD

PART NO.	2335-2XXMXXCUNT2
TITLE:	FH1.27mm DUAL SIDE INSERT SMT H=3.45 WITH POST
Customer NO.	